PERMITTING DRAWINGS
LAB USA'S ASH PROCESSING FACILITY - RED WING

SEH PROJECT NO.
LABUS 136249

N

N.T.S.

SHEET INDEX

SHEET NO.	DESCRIPTION
G000	TITLE SHEET
C100	EXISTING CONDITIONS
C200	SITE AND UTILITY LAYOUT
C300	GRADING PLAN
C400–C403	DETAILS
A100	FLOOR PLAN AND PERSPECTIVE
A200	EXTERIOR ELEVATIONS

THIS PLAN CONTAINS 10 SHEETS.

PROJECT LOCATION

CITY OF RED WING
GOODHUE COUNTY

RED WING, MINNESOTA

LEGEND

EXISTING

- STREET CENTERLINE (5+00, 6+00)
- SURVEY BASELINE (5, 6)
- COUNTY
- SECTION
- QUARTER
- SIXTEENTH
- CORPORATE LIMITS
- RIGHT OF WAY
- PERMANENT EASEMENT
- PROPERTY LINE
- R.R. RIGHT OF WAY
- SANITARY SEWER AND MANHOLE
- FORCE MAIN (FM)
- SANITARY SEWER SERVICE & CLEANOUT (CO)
- WATER MAIN, HYDRANT AND VALVE
- WATER SERVICE AND CURB STOP BOX
- WATER VALVE MANHOLE
- STORM SEWER, APRON, MANHOLE AND CATCH BASIN
- CULVERT
- BULKHEAD
- BURIED FIBER OPTIC CABLE (FO)
- BURIED FIBER OPTIC DUCT OR CONDUIT (FO–DUCT)
- BURIED PHONE CABLE AND PEDESTAL (T–BUR)
- BURIED PHONE DUCT OR CONDUIT AND MANHOLE (T–DUCT)
- BURIED TV CABLE AND PEDESTAL (TV–BUR)
- BURIED ELECTRIC CABLE (P–BUR)
- BURIED ELECTRIC DUCT OR CONDUIT AND MANHOLE (P–DUCT)
- OVERHEAD ELECTRIC, POLE AND DOWN GUY ANCHOR (P–OH)
- LIGHT POLE
- TRAFFIC SIGNAL STANDARD
- GAS MAIN (G)
- GAS SIGN, VALVE AND VENT
- PETROLEUM PIPELINE (PETRO)
- SOIL BORING (#)
- TRAVERSE POINT (#1)
- CONCRETE CURB AND GUTTER
- EXISTING PAVEMENT OR SIDEWALK (CONC / BIT)
- SIGN (HWY, PARK, STOP, ETC.)
- STREET NAME SIGN
- DITCH
- RAILROAD TRACKS
- FENCE (UNIDENTIFIED) (X)
- BARBED WIRE FENCE (X)
- CHAIN LINK FENCE (XC)
- ELECTRIC WIRE FENCE (XE)
- WOOD FENCE (XWD)
- WOVEN WIRE FENCE (XWW)
- PLATE BEAM GUARDRAIL
- CABLE GUARDRAIL
- DECIDUOUS AND CONIFEROUS TREE (6", 6")
- BUSH–SHRUB
- WOODED AREA
- WETLAND (WET)
- BUILDING (BLDG)

PROPOSED

- NEW RIGHT OF WAY
- PERMANENT EASEMENT
- TEMPORARY EASEMENT
- SANITARY SEWER AND MANHOLE
- FORCE MAIN (FM)
- SANITARY SEWER SERVICE & CLEANOUT (CO)
- WATER MAIN, HYDRANT AND VALVE
- WATER SERVICE AND CURB STOP BOX
- WATER VALVE MANHOLE
- STORM SEWER, MANHOLE AND CATCH BASIN
- CULVERT
- BULKHEAD
- DRAIN PIPE
- DITCH
- CONCRETE CURB AND GUTTER
- SILT FENCE
- FLOATATION SILT CURTAIN (SILTC)
- BIOROLL
- LIGHT POLE
- TRAFFIC SIGNAL, STANDARD
- SIGN (HWY, PARK, STOP, ETC.)
- STREET LIGHT FEED POINT
- STREET LIGHTING CABLE
- REMOVE TREE

Lab USA

SEH
PHONE: 320.229.4300
1200 25TH AVENUE SOUTH
P.O. BOX 1717
ST. CLOUD, MN 56302–1717
www.sehinc.com

I HEREBY CERTIFY THAT THIS PLAN WAS PREPARED BY ME OR UNDER MY DIRECT SUPERVISION AND THAT I AM A DULY LICENSED PROFESSIONAL ENGINEER UNDER THE LAWS OF THE STATE OF MINNESOTA.

Signature DARRYL R. HEAPS, PE

Date: 06/15/2016 Lic. No. 19531

FILE NO. LABUS 136249

G000

P:\K0\L\LABUS\136249\5-final-dsgn\51-drawings\10-Civil\cad\dwg\plnshts\Permit Plan Set\LA136249_TL.dwg 6/17/2016 1:03 PM dlandrus

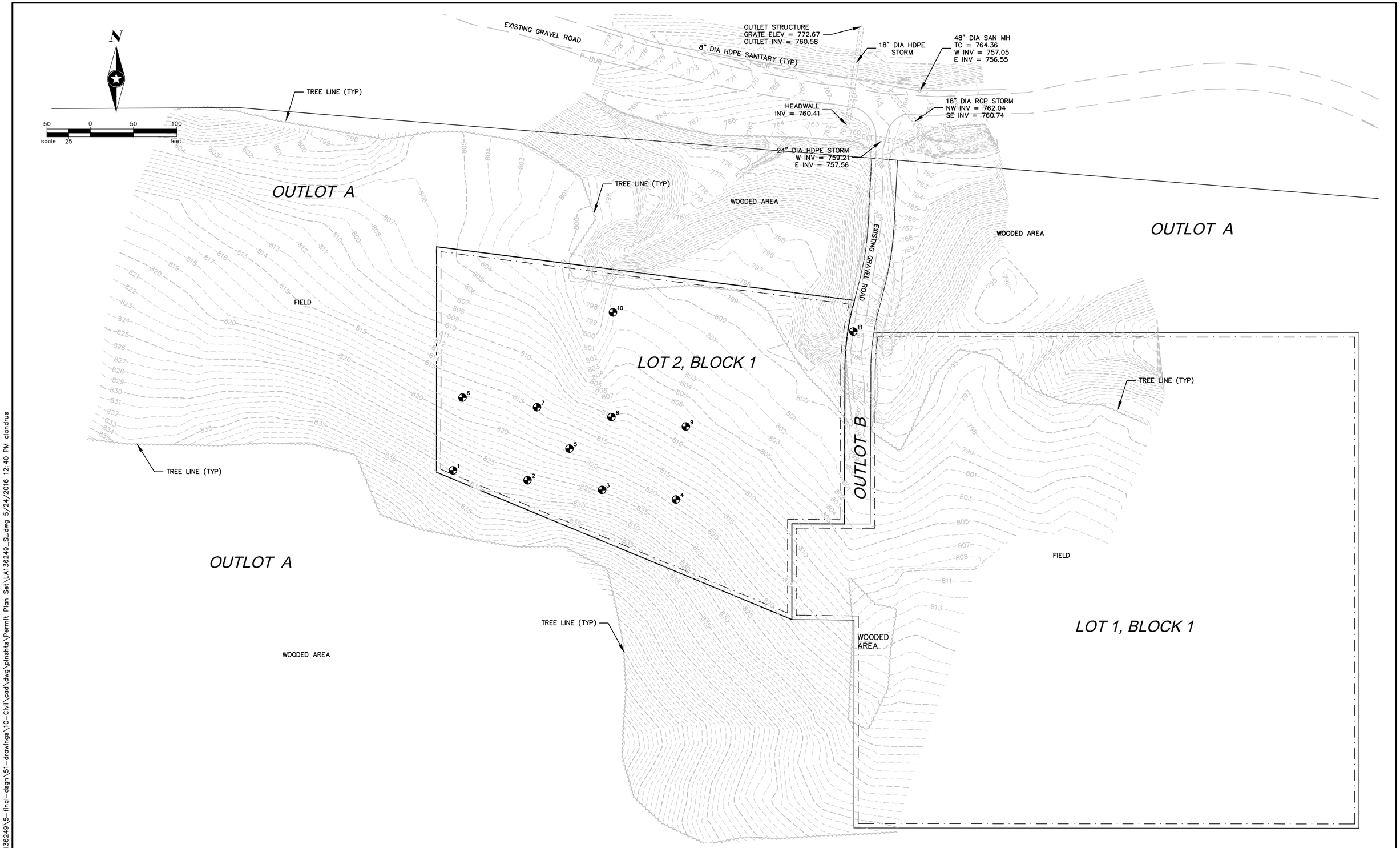

P:\KO\L\LABUS\136249\5-final-dsgn\51-drawings\10-Civil\cad\dwg\plnshts\Permit Plan Set\LA136249_SL.dwg 5/24/2016 12:40 PM dlandrus

DRAWN BY: DDL DESIGNER: BJR CHECKED BY: DRH DESIGN TEAM	NO.	BY	DATE	REVISIONS	PRELIMINARY: NOT FOR CONSTRUCTION	SEH 651.490.2000 3535 VADNAIS CENTER DRIVE ST. PAUL, MN 55110-5196 www.sehinc.com	LAB USA'S ASH PROCESSING FACILITY - RED WING	EXISTING CONDITIONS	FILE NO. LABUS 136249	C100

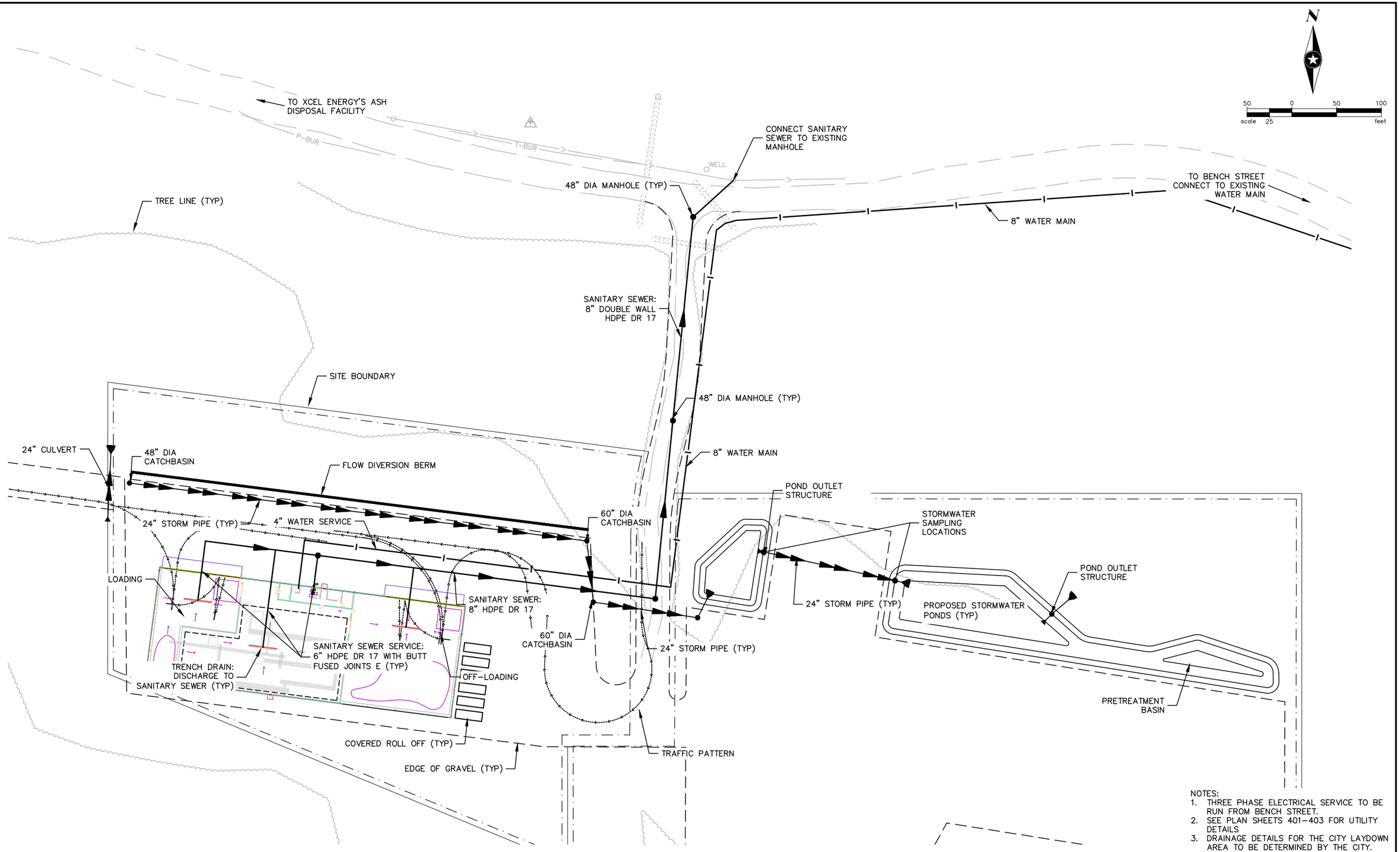

NOTES:
1. THREE PHASE ELECTRICAL SERVICE TO BE RUN FROM BENCH STREET.
2. SEE PLAN SHEETS 401–403 FOR UTILITY DETAILS
3. DRAINAGE DETAILS FOR THE CITY LAYDOWN AREA TO BE DETERMINED BY THE CITY.
4. A FLOW DIVERSION BERM NEEDS TO BE IMPLEMENTED TO DIVERT UPGRADIENT FLOW PRIOR TO REACHING CITY LAYDOWN AREA

P:\KO\L\LABUS\136249\5-final-dsgn\51-drawings\10-Civil\cad\dwg\plnshts\Permit Plan Set\LA136249_UT.dwg 5/31/2016 3:34 PM dlandrus

DESIGN TEAM	NO.	BY	DATE	REVISIONS
DRAWN BY: DDL				
DESIGNER: BJR				
CHECKED BY: DRH				

PRELIMINARY: NOT FOR CONSTRUCTION

SEH
651.490.2000
3535 VADNAIS CENTER DRIVE
ST. PAUL, MN 55110-5196
www.sehinc.com

Lab USA

LAB USA'S ASH PROCESSING FACILITY - RED WING

SITE AND UTILITY LAYOUT

FILE NO. LABUS 136249

C200

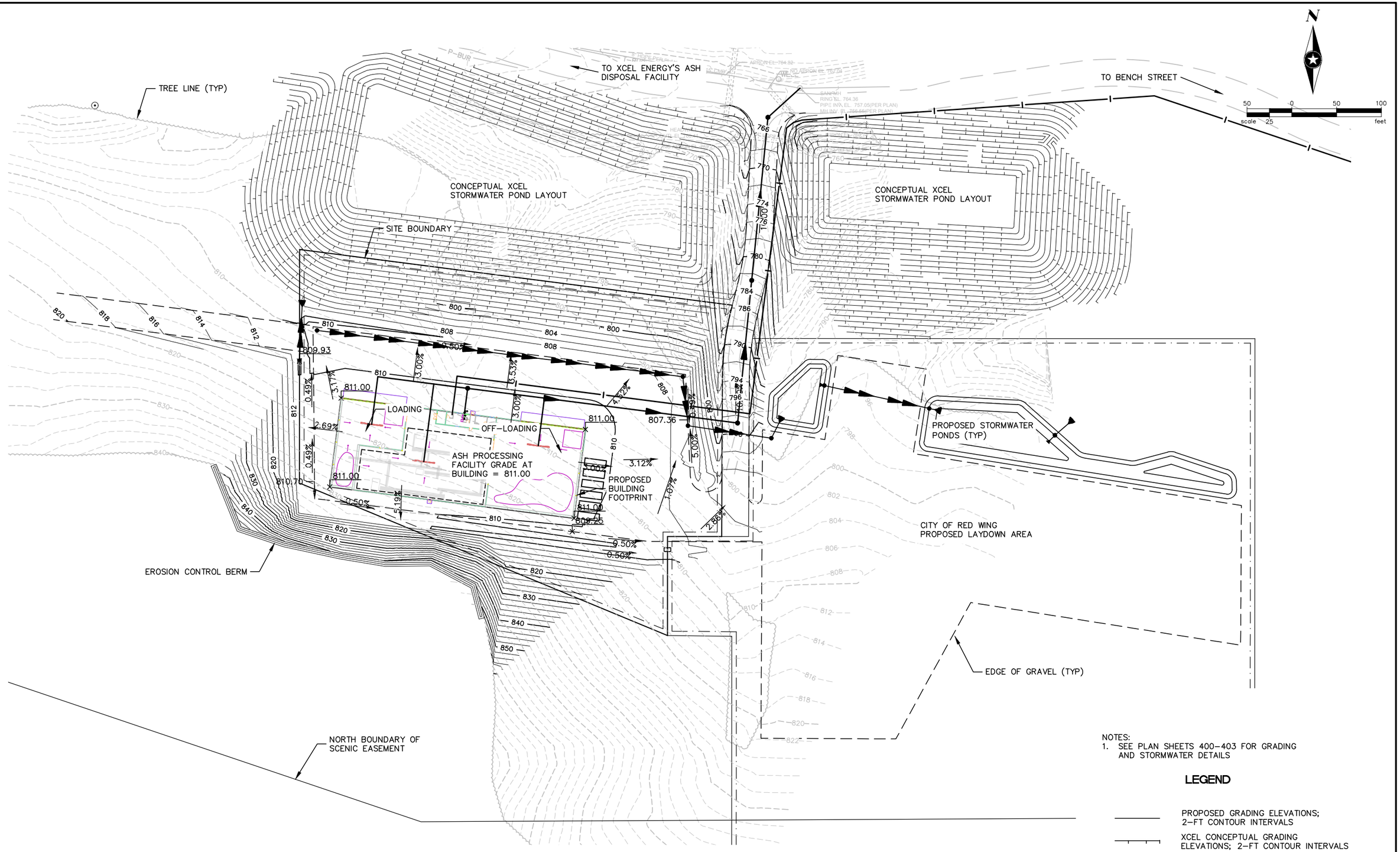

NOTES:
1. SEE PLAN SHEETS 400–403 FOR GRADING AND STORMWATER DETAILS

LEGEND

- PROPOSED GRADING ELEVATIONS; 2–FT CONTOUR INTERVALS
- XCEL CONCEPTUAL GRADING ELEVATIONS; 2–FT CONTOUR INTERVALS
- EXISTING ELEVATIONS; 2–FT CONTOUR INTERVALS

DRAWN BY: DDL	NO.	BY	DATE	REVISIONS
DESIGNER: BJR				
CHECKED BY: DRH				
DESIGN TEAM				

PRELIMINARY: NOT FOR CONSTRUCTION

SEH
651.490.2000
3535 VADNAIS CENTER DRIVE
ST. PAUL, MN 55110–5196
www.sehinc.com

Lab USA

LAB USA'S ASH PROCESSING FACILITY - RED WING

GRADING PLAN

FILE NO. LABUS 136249

C300

P:\KO\L\LABUS\136249\5-final-dsgn\51-drawings\10-Civil\cad\dwg\plnshts\Permit Plan Set\LA136249_GP.dwg 5/31/2016 3:34 PM dlandrus

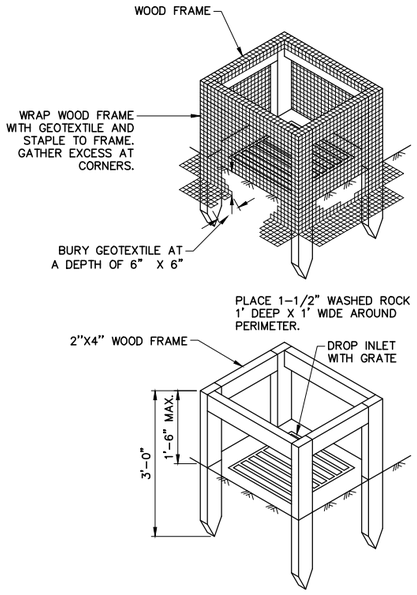

SILT FENCE BOX TO PROTECT DROP INLETS
USE WHERE INLET DRAINS AN AREA WITH SLOPES AT 1:3 OR LESS (TYPE A. SPEC 3891)

NTS

INLET PROTECTION - TYPE A

Revised: Oct. 2011
SEH Plate No. ERO-01

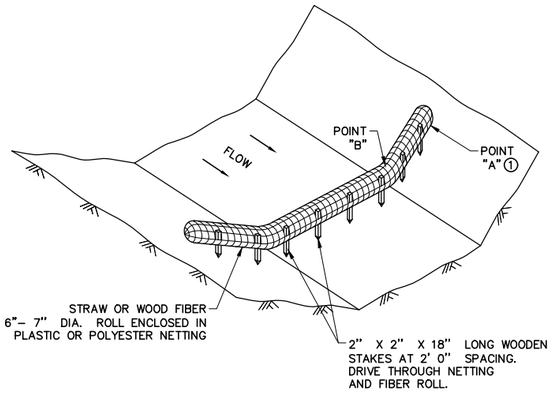

(1) POINT "A" SHALL BE A MINIMUM OF 6" HIGHER THAN POINT "B" TO ENSURE THAT WATER FLOWS OVER THE DIKE AND NOT AROUND THE ENDS.

NTS

BIOROLL DITCH CHECK

Revised: Oct. 2011
SEH Plate No. ERO-05

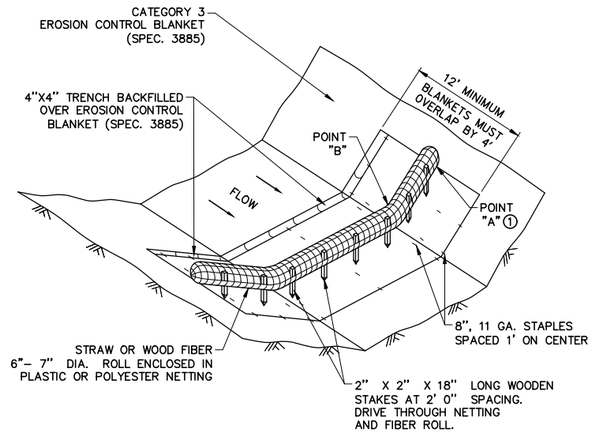

(1) POINT "A" SHALL BE A MINIMUM OF 6" HIGHER THAN POINT "B" TO ENSURE THAT WATER FLOWS OVER THE DIKE AND NOT AROUND THE ENDS.

NTS

BIOROLL BLANKET SYSTEM

Revised: Oct. 2011
SEH Plate No. ERO-06

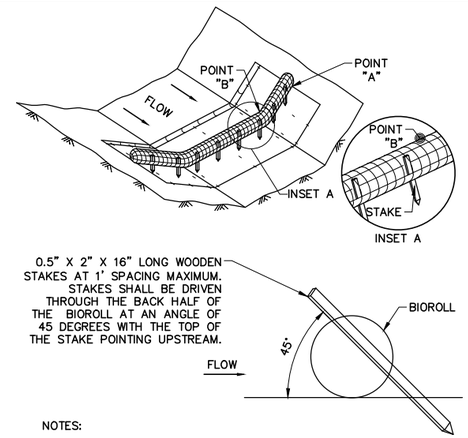

NOTES:

SPACING BETWEEN EACH DITCH CHECK SHOULD BE DETERMINED FROM THE FOLLOWING SPACING FORMULA:

$$\text{SPACING (FT)} = \frac{\text{DITCH CHECK HEIGHT (FT)}}{\text{\% CHANNEL SLOPE}}$$

POINT "A" LABELED ON DETAILS SHALL BE A MIN. OF 6" HIGHER THAN POINT "B" TO ENSURE THAT WATER FLOWS OVER THE DIKE AND NOT AROUND THE ENDS.

CHECK DAMS AND DIKES SHOULD BE LIMITED IN USE FOR DRAINAGE AREAS OF LESS THAN FIVE ACRES AND IN CHANNELS OF LESS THAT TEN PERCENT SLOPE.

IF IN SERIES, THE TOP OF THE DOWNSTREAM DAM OR DIKE SHOULD ALIGN WITH THE BOTTOM OF THE UPSTREAM.

NTS

BIOROLL STAKING

Revised: Oct. 2011
SEH Plate No. ERO-07

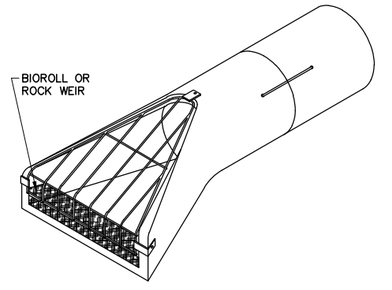

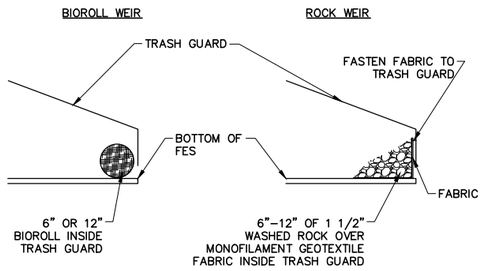

NTS

APRON OUTLET PROTECTION

Revised: Oct. 2011
SEH Plate No. ERO-10

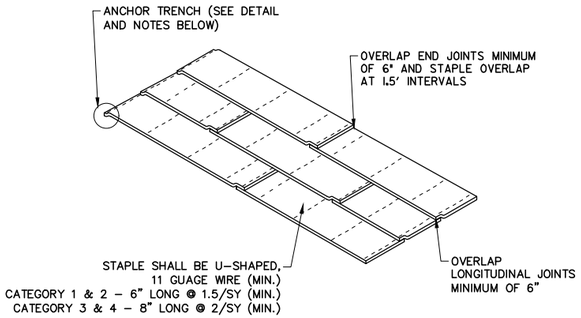

ANCHOR TRENCH
1. DIG 6" X 6" TRENCH
2. LAY BLANKET IN TRENCH
3. STAPLE AT 1.5' INTERVALS
4. BACKFILL WITH NATURAL SOIL AND COMPACT
5. BLANKET LENGTH SHALL NOT EXCEED 100' WITHOUT AN ANCHOR TRENCH

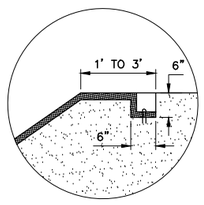

NTS

EROSION CONTROL BLANKET INSTALLATION

Revised: Oct. 2011
SEH Plate No. ERO-11

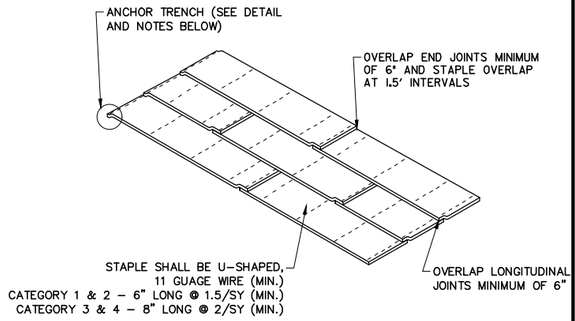

ANCHOR TRENCH
1. DIG 6" X 6" TRENCH
2. LAY BLANKET IN TRENCH
3. STAPLE AT 1.5' INTERVALS
4. BACKFILL WITH NATURAL SOIL AND COMPACT
5. BLANKET LENGTH SHALL NOT EXCEED 100' WITHOUT AN ANCHOR TRENCH

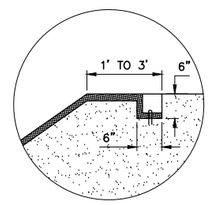

NTS

BLANKET STAPLING PATTERN (PLATE 1 OF 2)

Revised: Oct. 2011
SEH Plate No. ERO-12

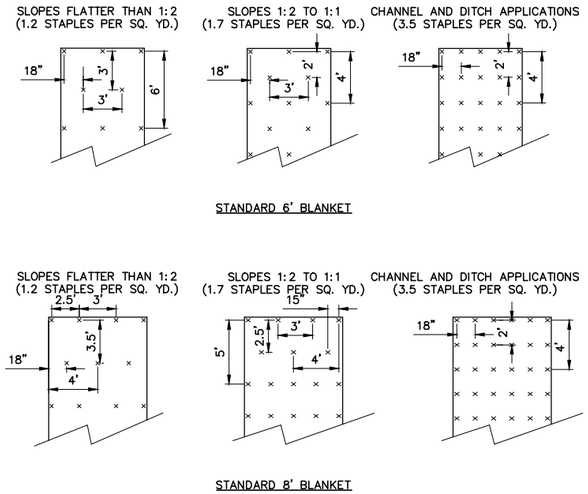

NTS

BLANKET STAPLING PATTERN (PLATE 2 OF 2)

Revised: Oct. 2011
SEH Plate No. ERO-12

DRAWN BY: DDL				PRELIMINARY: NOT FOR CONSTRUCTION	
DESIGNER: BJR					
CHECKED BY: DRH					
DESIGN TEAM	NO.	BY	DATE	REVISIONS	

SEH
651.490.2000
3535 VADNAIS CENTER DRIVE
ST. PAUL, MN 55110-5196
www.sehinc.com

LAB USA'S ASH PROCESSING FACILITY - RED WING

CIVIL DETAILS

FILE NO. LABUS 136249

C400

P:\KO\L\LABUS\136249\5-final-dsgn\51-drawings\10-Civil\cad\dwg\plnshts\Permit Plan Set\LA136249_DT.dwg 5/31/2016 3:49 PM dlandrus

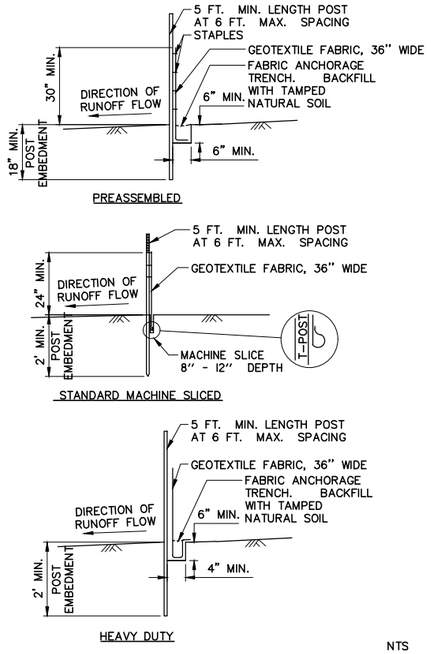

DESIGN GUIDELINES:
(SEE MNDOT SPEC. 2573.3C AND 3886)

NTS

SEH	SILT FENCE	Revised: Jan. 2013	SEH Plate No. ERO-15

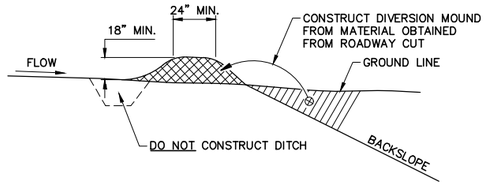

DESIGN GUIDELINES:
STORM FREQUENCY: 10 YEAR – 24 HOUR
MAXIMUM DRAINAGE AREA: 5 ACRES
MAXIMUM DIVERSION: GRADE 5%

NTS

SEH	DIVERSION MOUND	Revised: Oct. 2011	SEH Plate No. ERO-22

CLASS II RIPRAP REQUIREMENTS
12" TO 24" 4 CUBIC YARDS
27" TO 33" 8 CUBIC YARDS
36" TO 48" 12 CUBIC YARDS
(APPROX. 1.4 TONS PER CUBIC YARD)

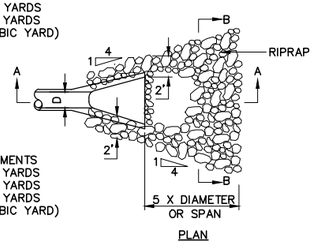

PLAN

CLASS III RIPRAP* REQUIREMENTS
12" TO 24" 6 CUBIC YARDS
27" TO 33" 12 CUBIC YARDS
36" TO 48" 18 CUBIC YARDS
(APPROX. 1.4 TONS PER CUBIC YARD)

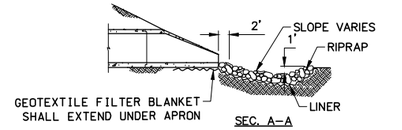

SEC. A–A

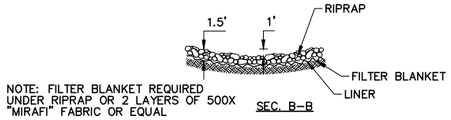

SEC. B–B

* CLASS III RIPRAP, D50= 9 IN.

NTS

SEH	CLASS II AND III RIPRAP AT OUTLETS	Revised: Oct. 2011	SEH Plate No. ERO-23

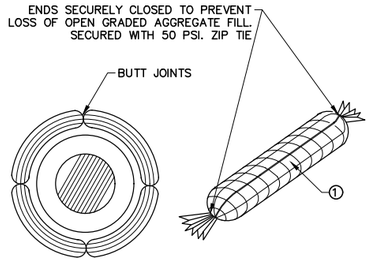

① GEOTEXTILE SOCK BETWEEN 4–10 FT. LONG AND 4–6 INCH DIAMETER. SEAM JOINED BY TWO ROWS OF STITCHING WITH A PLASTIC MESH BACKING OR HEAT BONDED (OR APPROVED EQUIVALENT). FILL ROCK LOG WITH OPEN GRADED AGGREGATE CONSISTING OF SOUND DURABLE PARTICLES OF COARSE AGGREGATE CONFORMING TO SPEC. 3137 TABLE 3137–1; CA–3 GRADATION.

NTS

SEH	ROCK LOG	Revised: Oct. 2011	SEH Plate No. ERO-29

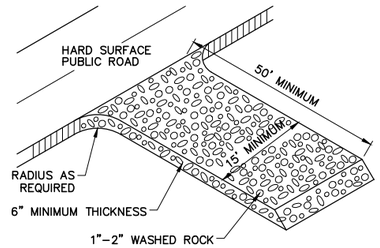

NOTE:
TO PREVENT TRACKING OF MUD ONTO PAVED ROADS, INSTALL ADDITIONAL ROCK OR REMOVE AND REPLACE THE PAD AS REQUIRED

NTS

SEH	ROCK CONSTRUCTION ENTRANCE	Revised: Oct. 2011	SEH Plate No. ERO-35

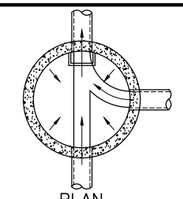

PLAN

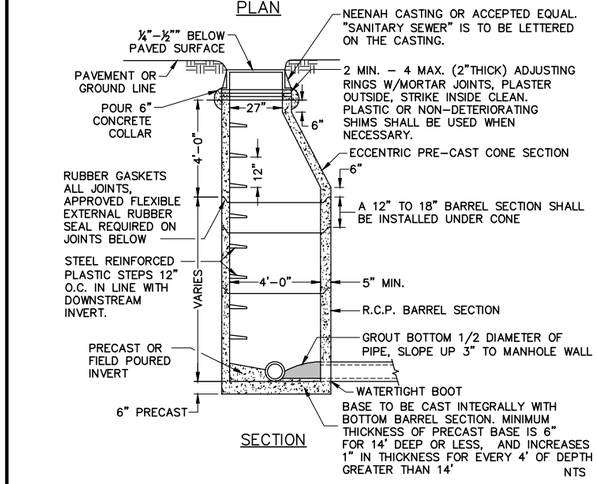

SECTION

NTS

SEH	SANITARY SEWER MANHOLE	Revised: Oct. 2011	SEH Plate No. SAN-01

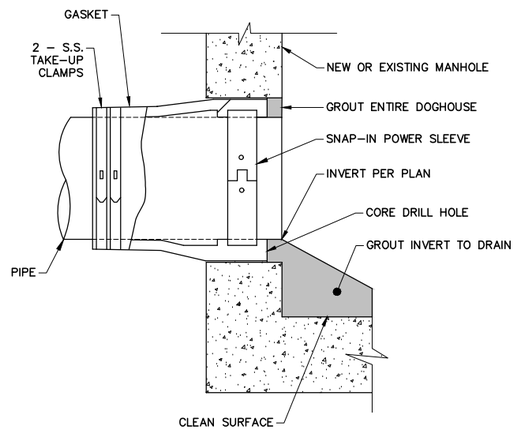

NOTE: CONNECTION TO EXISTING SANITARY SEWER MANHOLE SHALL BE CORE DRILLED WITH A SNAP IN BOOT.

WATER TIGHT
SNAP–IN–SLEEVE

NTS

SEH	CORE DRILLED PIPE TO MANHOLE CONNECTION	Revised: Oct. 2011	SEH Plate No. SAN-04

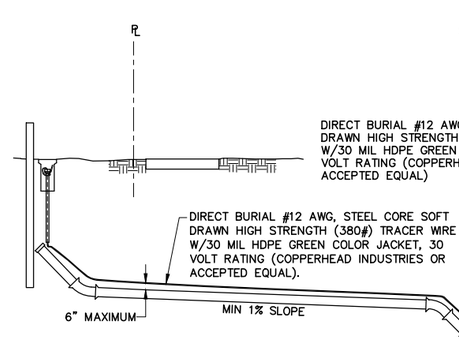

① PLACE WIRE ALONG AXIS OF PIPE AND NOT IN DIRECT CONTACT WITH PVC PIPE.

② EXCEPT FOR APPROVED SPLICED–IN CONNECTIONS, TRACER WIRE SHALL BE CONTINUOUS FROM END TO END.

③ SPLICED OR REPAIRED WIRE CONNECTIONS IN THE TRACER WIRE SYSTEM SHALL BE UL LISTED FOR DIRECT BURIAL, WATER AND CORROSION PROOF (DRYCONN KING, DRYCONN DIRECT BURY LUG OR ACCEPTED EQUAL). SPLIT–BOLT AND TWISTED WIRE SPLICES WILL NOT BE ACCEPTED.

④ TRACER WIRE FOR SERVICES INSTALLED WITH HORIZONTAL DIRECTIONAL DRILLING METHODS SHALL BE DIRECT BURIAL #12 AWG SOLID, STEEL CORE HARD DRAWN EXTRA HIGH STRENGTH WIRE (1150# AVERAGE TENSILE LOAD) WITH 45 MIL HDPE GREEN JACKET 30 VOLT RATING (COPPERHEAD INDUSTRIES OR ACCEPTED EQUAL)

⑤ PROVIDE 17# MAGNESIUM ANODE AT TRACER WIRE END. REMOVE ANODE PROTECTIVE PLASTIC COVER AND APPLY WATER AS DIRECTED BY MANUFACTURER.

⑥ TEST CONTINUITY OF CONDUCTION IN THE PRESENCE OF THE ENGINEER. DEMONSTRATE CONTINUITY BY CONNECTING A SIGNAL GENERATOR AT TERMINUS OF THE SYSTEM AND TRACE THE WIRE THROUGHOUT THE INSTALLATION. LOCATE AND REPAIR ANY BREAK IN CONDUCTIVITY.

NTS

SEH	SANITARY SEWER SERVICE TRACER WIRE (PLATE 1 OF 2)	Revised: Oct. 2011	SEH Plate No. SAN-09

DRAWN BY: DDL
DESIGNER: BJR
CHECKED BY: DRH
DESIGN TEAM

NO.	BY	DATE	REVISIONS

PRELIMINARY:
NOT FOR CONSTRUCTION

SEH
651.490.2000
3535 VADNAIS CENTER DRIVE
ST. PAUL, MN 55110–5196
www.sehinc.com

LAB USA'S ASH PROCESSING FACILITY - RED WING

CIVIL DETAILS

FILE NO. LABUS 136249

C401

P:\KO\L\LABUS\136249\5-final-dsgn\51-drawings\10-Civil\cad\dwg\plnshts\Permit Plan Set\LA136249_DT.dwg 5/31/2016 3:49 PM dlandrus

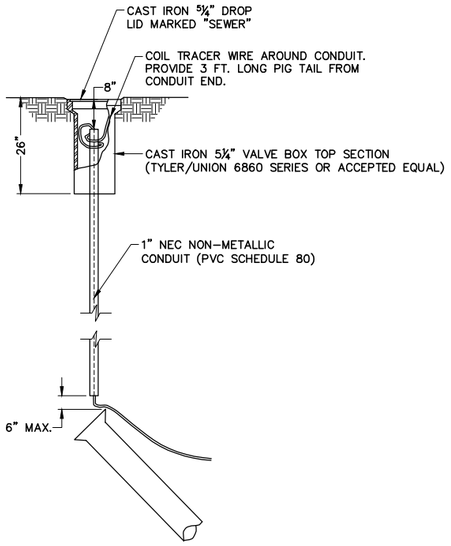

NTS

SANITARY SEWER TRACER WIRE (PLATE 2 OF 2)

Revised: Oct. 2011
SEH Plate No. SAN-09

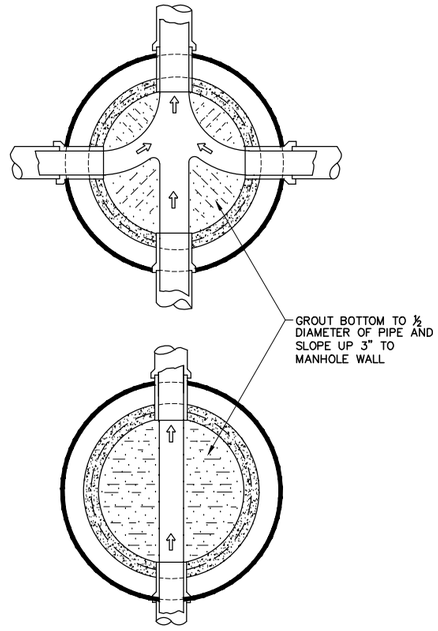

NTS

TYPICAL INVERT DETAILS

Revised: Oct. 2011
SEH Plate No. SAN-10

COARSE FILTER AGGREGATE SHALL BE MN/DOT SPEC 3149H. PAYMENT WILL BE BASED ON THE TABLE BELOW FOR ALL SDR 26 PIPE ONLY. (UNLESS NOTED OTHERWISE ON THE PLANS.)

PIPE SIZE	CY/FT
8"	0.30
10"	0.31
12"	0.32
15"	0.34
18"	0.36
21"	0.37
24"	0.39
27"	0.40

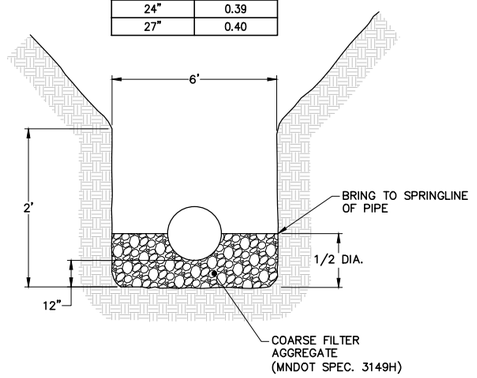

NOTE:
FOR USE IN UNSTABLE TRENCH BOTTOM AS DETERMINED BY THE ENGINEER

NTS

TRENCH BEDDING AND FOUNDATION

Revised: Oct. 2011
SEH Plate No. SAN-15

NOTE:
ALL PIPE SHALL BE DOUBLE WALL HDPE DR 17 W/ BUTT FUSED JOINTS

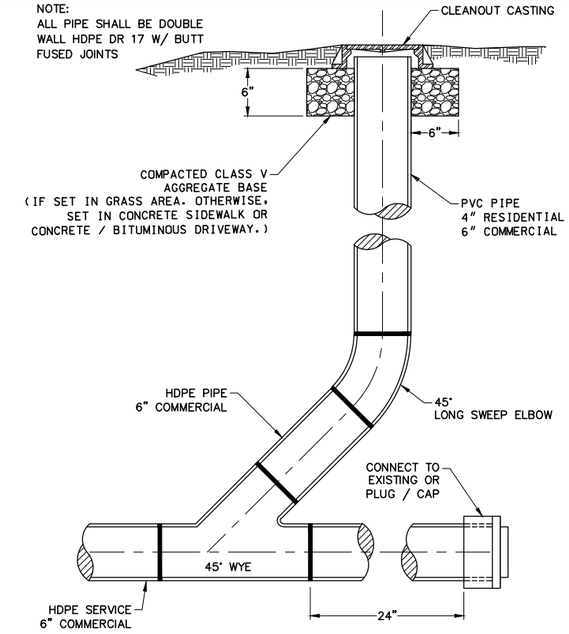

IN LINE CLEANOUT

NTS

SANITARY SEWER SERVICE CLEANOUT

Revised: Oct. 2011
SEH Plate No. SAN-17

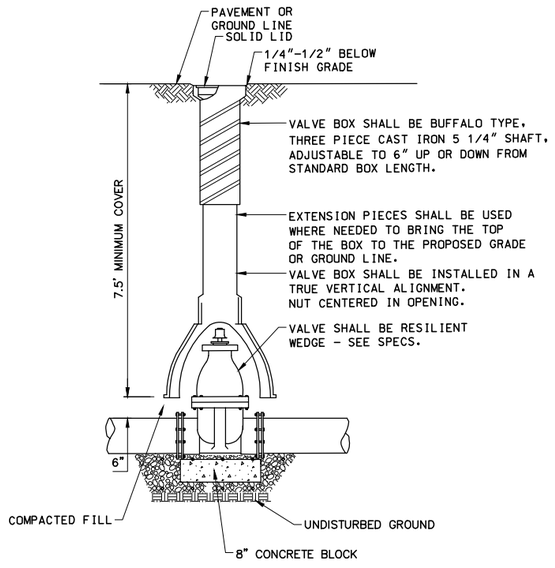

NTS

GATE VALVE AND BOX

Revised: Oct. 2011
SEH Plate No. WAT-04

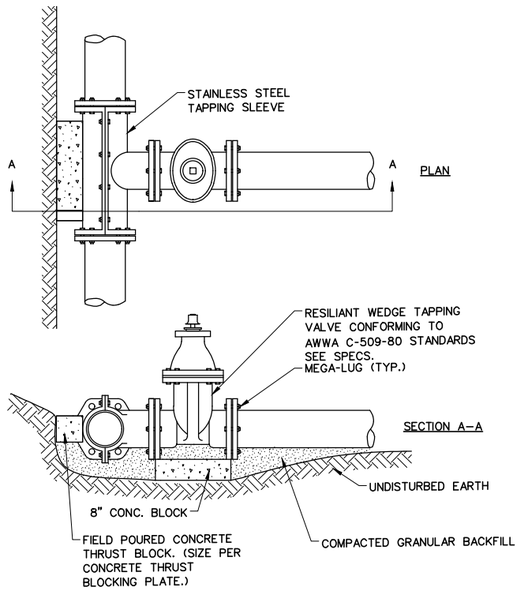

NTS

WATER MAIN WET TAP

Revised: Oct. 2011
SEH Plate No. WAT-09

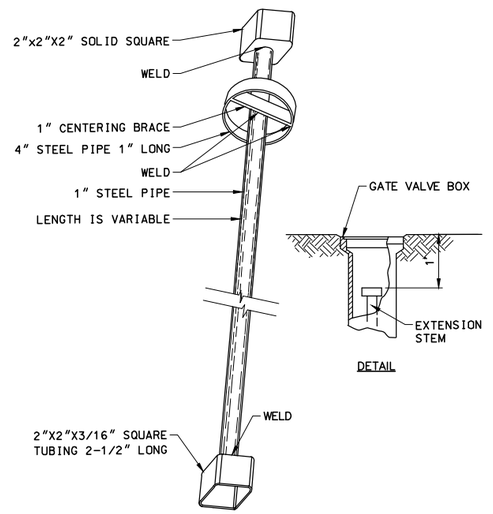

AFTER FABRICATION, THE ENTIRE GATE VALVE EXTENSION STEM SHALL BE PAINTED WITH A SHOP APPLIED PRIMER AND WITH AN EXTERIOR EPOXY PAINT. COLOR TO BE SPECIFIED BY OWNER.

NTS

VALVE EXTENSION STEM

Revised: Oct. 2011
SEH Plate No. WAT-11

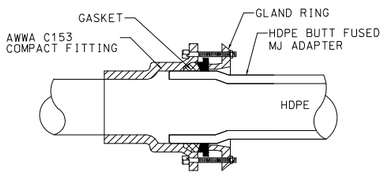

NTS

HDPE BUTT FUSION X MJ ADAPTER

DRAWN BY:	DDL
DESIGNER:	BJR
CHECKED BY:	DRH
DESIGN TEAM	

NO.	BY	DATE	REVISIONS

PRELIMINARY: NOT FOR CONSTRUCTION

SEH
651.490.2000
3535 VADNAIS CENTER DRIVE
ST. PAUL, MN 55110-5196
www.sehinc.com

LAB USA'S ASH PROCESSING FACILITY - RED WING

CIVIL DETAILS

FILE NO. LABUS 136249

C402

P:\KOV\LABUS\136249\5-final-dsgn\51-drawings\10-Civil\cad\dwg\plnshts\Permit Plan Set\LA136249_DT.dwg 5/31/2016 3:49 PM dlandrus

TRACER WIRE

TRACER WIRE SHALL BE #12 AWG CCS COMPLYING WITH ASTM-D-1248, 30 VOLT RATING, GREEN FOR SEWER SERVICES AND FORCEMAIN AND BLUE FOR WATER MAIN
- #1230HS HIGH STRENGTH FOR OPEN CUT
- #1245EHS EXTRA HIGH STRENGTH FOR HORIZONTAL DIRECTIONAL DRILLING AND JACK/BORING
- SPLICING 2 WIRES, DRYCONN KING 6 BLUE
- SPLICING 3 OR MORE, DRYCONN DIRECT BURY LUG YELLOW
- WIRE SPLICING WILL BE ALLOWED WHEN APPROVED ONLY

POLYVINYL CHLORIDE PIPE (PVC) – C900

PVC WATER DISTRIBUTION PIPE AND JOINTS SHALL CONFORM TO:
AWWA C-900 (DR)
ASTM D3139

DUCTILE IRON PIPE

DUCTILE IRON PIPE AND JOINTS SHALL CONFORM TO:
AWWA C110
ZWWA C150/C151

PLASTIC FILM WRAP FOR DIP

WATER DISTRIBUTION PIPE AND HYDRANT BARRELS SHALL BE WRAPPED IN PLASTIC FILM. THE WRAP SHALL BE "TUBE" TYPE HAVING 8-MIL THICKNESS. A 2 INCH WIDE POLYETHYLENE ADHESIVE TAPE SHALL BE USED TO SECURE THE TUBE OF FILM TO THE PIPE.

DUCTILE IRON FITTINGS

WATER MAIN FITTINGS SHALL CONFORM TO ANSI A21.53, A21.11 & A21.4. FITTINGS SHALL BE COATED WITH 6 – 8 MM MINIMUM THICKNESS FUSION BONDED EPOXY CONFORMING TO ANSI/AWWA C550 AND C116/A21.16.

THRUST RESTRAINT

ALL WATER MAIN, VALVES, SERVICES, FITTINGS, STUBS, EXTENSIONS, BLIND FLANGES, AND PLUGS USED FOR RETAINING WATER PRESSURE MUST BE TIED WITH "MEGALUG" JOINT RESTRAINTS OR ACCEPTED EQUAL. BASED UPON A 175 PSI TEST PRESSURE AND 8' COVER, THE FOLLOWING SHOWS THE MINIMUM LENGTH OF PIPE EACH WAY OF A FITTING TO BE RESTRAINED. JOINT RESTRAINTS TO BE EPOXY COATED AS REQUIRED ON WATER MAIN FITTINGS.

PIPE DIAMETER	DEAD END TEE BRANCH OR 90°BEND	45°BEND	22-1/2°BEND	11-1/4°BEND
4" (SERVICE)	29 LF	8 LF	4 LF	4 LF
6"	40 LF	10 LF	5 LF	4 LF
8"	53 LF	12 LF	6 LF	4 LF
10"	64 LF	14 LF	7 LF	4 LF
12"	76 LF	16 LF	8 LF	5 LF
16"	99 LF	20 LF	10 LF	6 LF
18"	110 LF	22 LF	12 LF	6 LF

WHERE RESTRAINED JOINTS ARE REQUIRED AND THE PIPE IS IN A CASING NEAR THE FITTING TO BE RESTRAINED, THE LENGTH OF PIPE IN THE CASING SHALL NOT BE INCLUDED IN THE LENGTH OF PIPE NECESSARY TO DEVELOP SUFFICIENT SOIL FRICTION TO OVERCOME THRUST.

SEH | WATER MAIN DETAILS AND TIE SCHEDULE TABLE

ALL GLANDS USED FOR JOINT RESTRAINT SHALL BE EPOXY COATED.

ALL MECHANICAL JOINT BOLTS SHALL BE COR-BLUE.

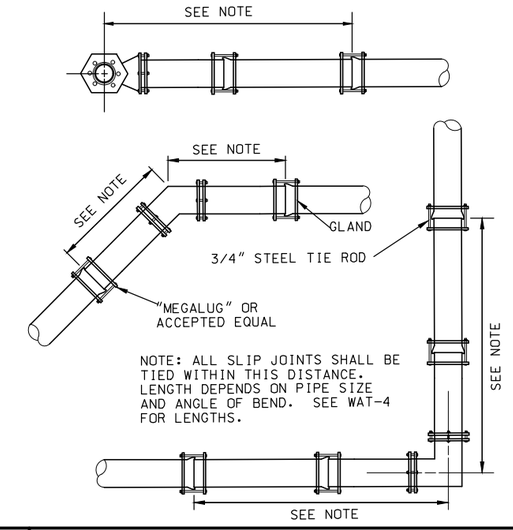

SEH | WATER MAIN TYING DETAIL

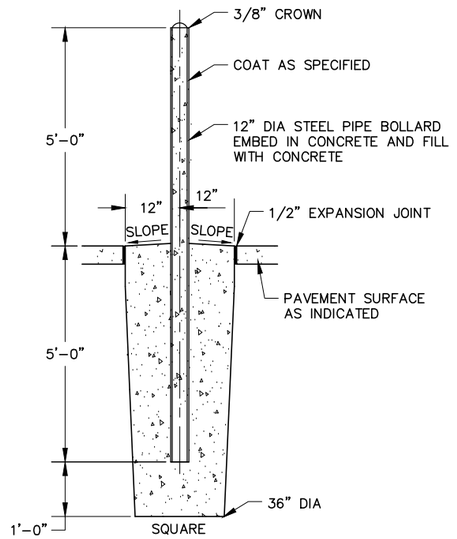

NTS

SEH | BOLLARD DETAIL | Revised: Oct. 2011 | SEH Plate No. MISC-19

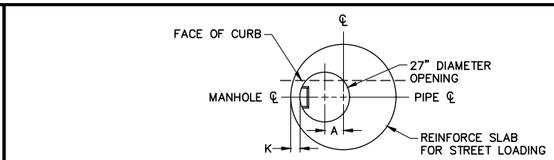

COVER SLAB

DIMENSION CHART

	MANHOLE TYPE					
	B	C	D	E	F	G
DIA.	48"	60"	72"	84"	96"	102"
A	9.5"	15.5"	21.5"	27.5"	34.5"	38"
S	58"	72"	86"	100"	114"	126"
K	6"	7"	8"	9"	9"	9"
T	6"	8"	8"	8"	8"	8"

NOTE:
GUTTERLINE TO CENTER OF STRUCTURE DIMENSION WHEN USED AS A CATCH BASIN.
0.88' FOR NEENAH R-3250-B (2' SQUARE GRATE)
1.13 FOR R-3250-I (26" ROUND GRATE)

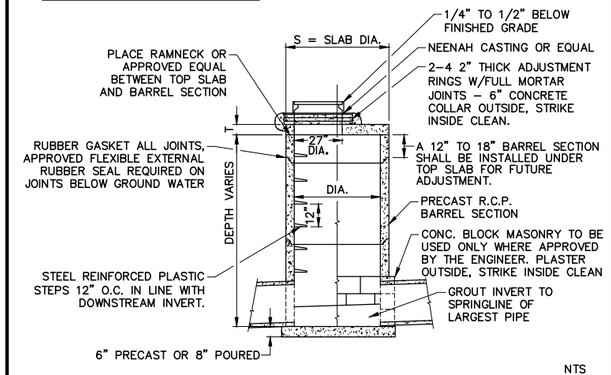

NTS

SEH | CATCH BASIN/MANHOLE (27" DIA. OPENING) | Revised: Oct. 2011 | SEH Plate No. STM-01

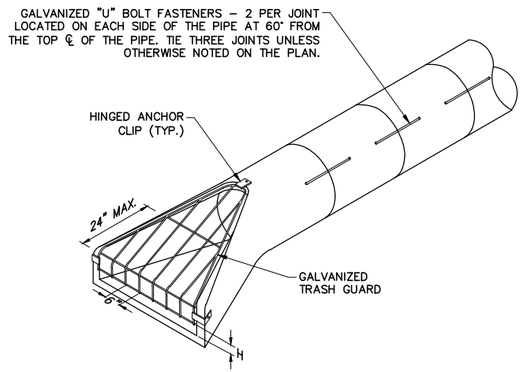

SEE DETAIL FOR RIPRAP AT RCP APRONS.

PROVIDE 3 ANCHOR CLIPS TO FASTEN TRASH GUARD TO FLARED END SECTION. HOT DIP GALVANIZE AFTER FABRICATION.

TRASH GUARD SIZING			
PIPE SIZE	BARS	"H"	BOLTS
12"–18"	¾"ø	4"	⅝"
21"–42"	1"ø	6"	¾"
48"–72"	1 ¼"ø	12"	1"

"U" BOLT REQUIREMENTS		
PIPE SIZE	BOLT DIA.	LENGTH
21" & LESS	½"	24"
24" TO 36"	⅝"	24"
42" TO 54"	¾"	24"
60" & GREATER	1"	24"

NTS

SEH | RCP FLARED END SECTION WITH TRASH GUARD | Revised: Oct. 2011 | SEH Plate No. STM-12

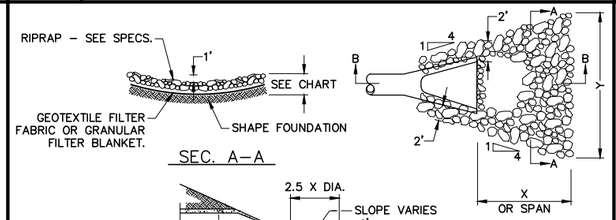

RIPRAP AT RCP OUTLETS						
			CLASS II d50 = 6"	CLASS III d50 = 9"	CLASS IV d50 = 12"	CLASS II = TYPE III CLASSES III & IV = TYPE IV
PIPE DIA. (IN.)	X (FT.)	Y (FT.)	12" DEPTH RIPRAP (CU. YDS.)	18" DEPTH RIPRAP (CU. YDS.)	24" DEPTH RIPRAP (CU. YDS.)	GEOTEXTILE FABRIC (SY)
12	8	10.5	2.8	4.1	5.5	9.5
15	8	11.0	2.9	4.4	5.8	10.1
18	10	12.5	3.9	5.9	7.8	13.4
21	10	13.0	4.2	6.3	8.4	14.2
24	12	14.5	5.5	8.3	11.0	14.8
27	12	15.0	5.8	8.7	11.6	19
30	14	16.5	7.3	10.9	14.5	23.5
36	16	18.5	9.2	13.8	18.3	29.5
42	18	20.5	10.9	16.3	21.7	35.2
48	20	22.0	12.9	19.4	25.8	41.3

NTS

SEH | RIP RAP AT ROUND RCP APRONS | Revised: Oct. 2011 | SEH Plate No. STM-13

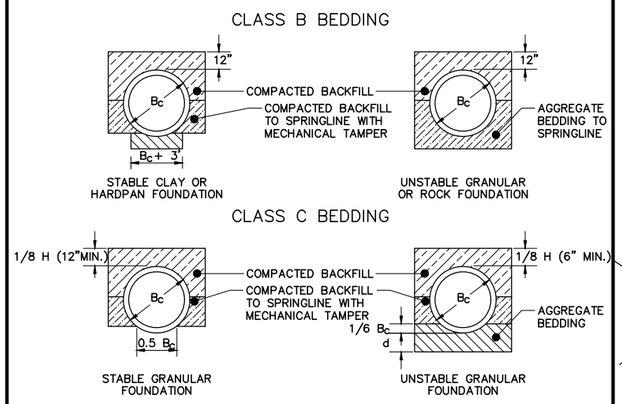

NOTES:

1. AGGREGATE BEDDING AND SAND ARE NOT SEPARATE PAY ITEMS UNLESS THEY ARE INCLUDED AS INDIVIDUAL QUANTITIES IN THE PROPOSAL.

LEGEND

B_c = OUTSIDE DIAMETER
H = BACKFILL COVER OVER TOP OF PIPE
D = INSIDE DIAMETER
d = DEPTH OF BEDDING MATERIAL BELOW PIPE
A_s = AREA OF TRAVERSE STEEL IN THE CRADLE OR ARCH EXPRESSED AS A PERCENTAGE OF AREA OF CONCRETE AT INVERT OR CROWN.

DEPTH OF BEDDING MATERIAL BELOW PIPE	
D	d MIN.
27" & SMALLER	3"
30" TO 60"	4"
66" & LARGER	6"

NTS

SEH | TRENCH BEDDING FOR CIRCULAR PIPE | Revised: Mar. 2015 | SEH Plate No. STM-23

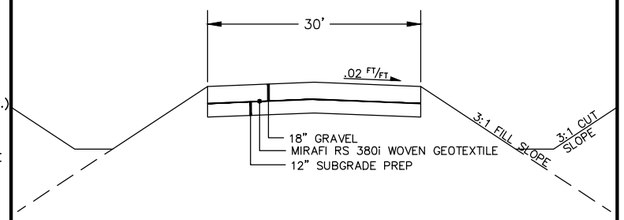

SEH | ACCESS ROAD TYPICAL SECTION

DRAWN BY: DDL
DESIGNER: BJR
CHECKED BY: DRH
DESIGN TEAM

NO.	BY	DATE	REVISIONS

PRELIMINARY: NOT FOR CONSTRUCTION

SEH
651.490.2000
3535 VADNAIS CENTER DRIVE
ST. PAUL, MN 55110-5196
www.sehinc.com

LAB USA'S ASH PROCESSING FACILITY - RED WING

CIVIL DETAILS

FILE NO. LABUS 136249

C403

P:\KOL\LABUS\136249\5-final-dsgn\51-drawings\10-Civil\cad\dwg\plnshts\Permit Plan Set\LA136249_DT.dwg 5/31/2016 3:49 PM dlandrus

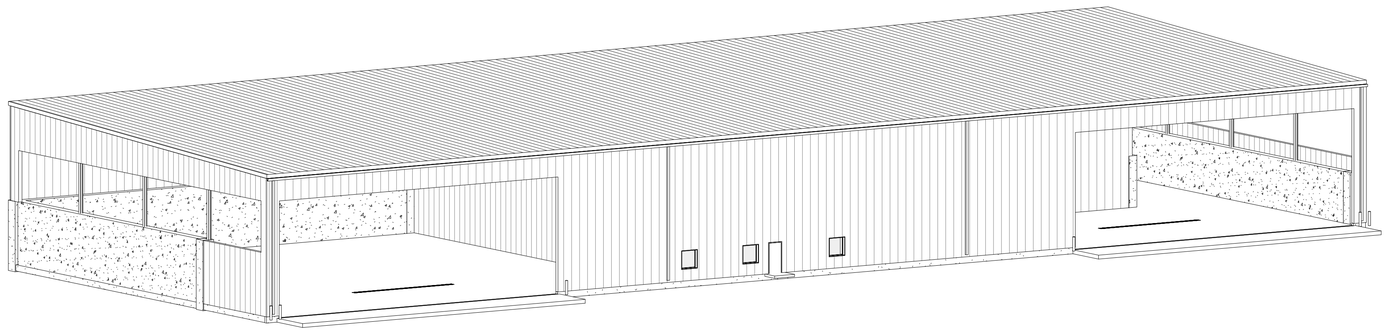

1 A100 PERSPECTIVE

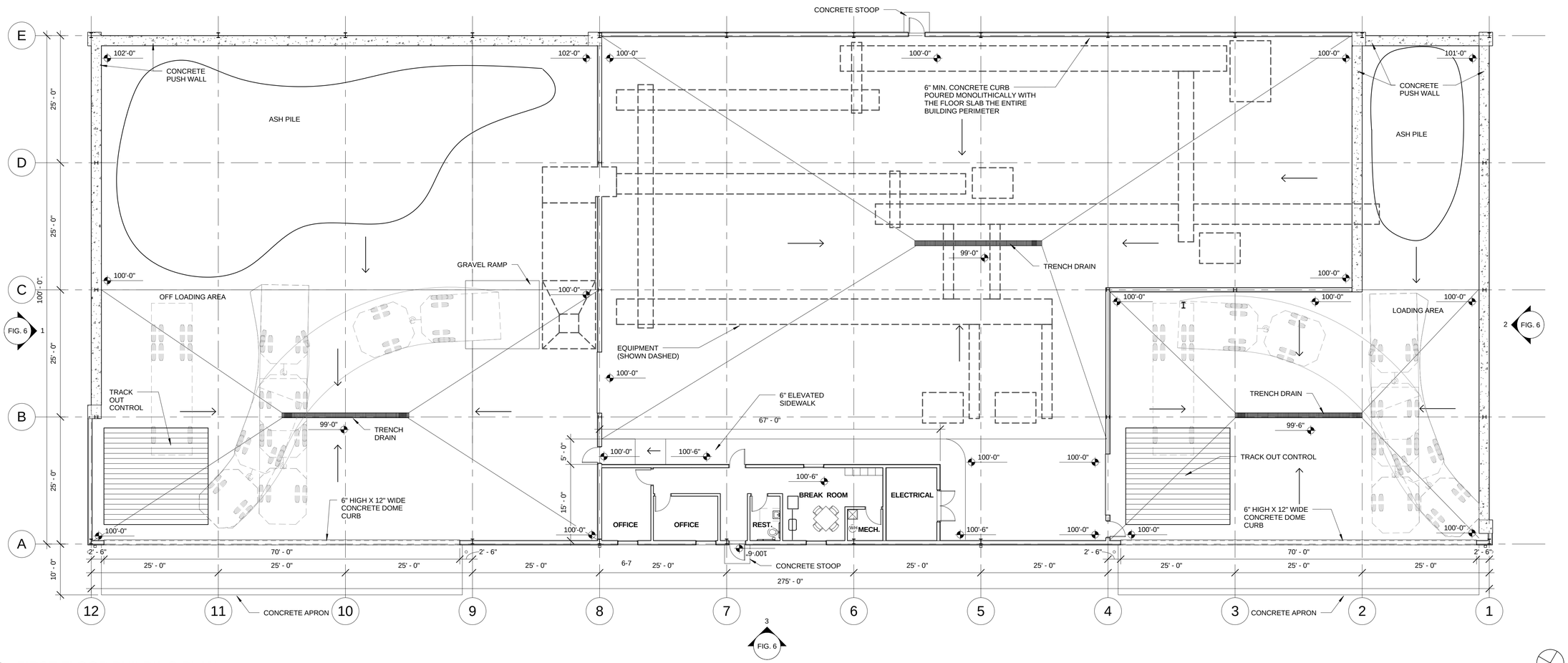

2 A100 FIRST FLOOR BUILDING PLAN
3/32" = 1'-0"

C:\Users\kxiong\Documents\REDWING_ASH_FACILITY_CENTRAL_16_kxiong.rvt

Short Elliott Hendrickson Inc.
1200 25th Avenue South
St. Cloud, MN 56302-1717
320.229.4300 main | 888.908.8166 fax
800.572.0617 toll free | www.sehinc.com

PRELIMINARY NOT FOR CONSTRUCTION

MARK	DATE	DESCRIPTION

LAB USA'S
ASH PROCESSING BUILDING
RED WING, MN

LABUS 137360
ISSUE DATE 05.27.2016
DESIGN BY JM
DRAWN BY KX
PROJECT MGR BR

SHEET CONTENTS
FLOOR PLAN AND PERSPECTIVE

A100

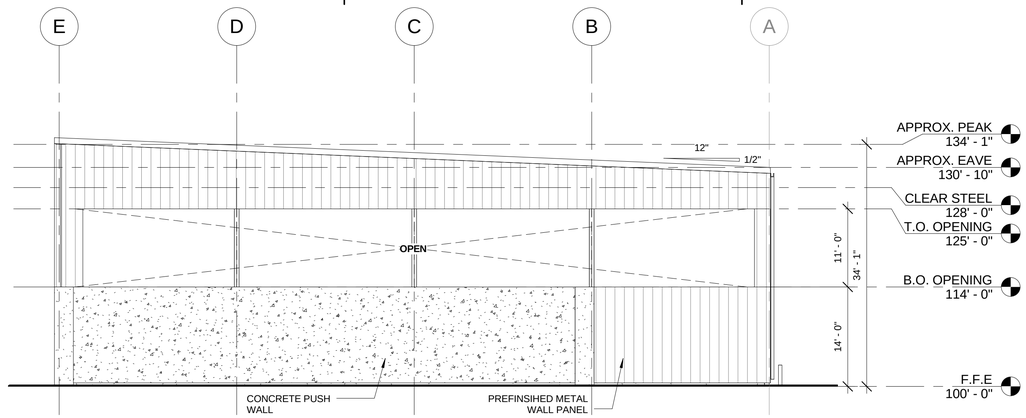

1 A200 EAST BUILDING ELEVATION
3/32" = 1'-0"

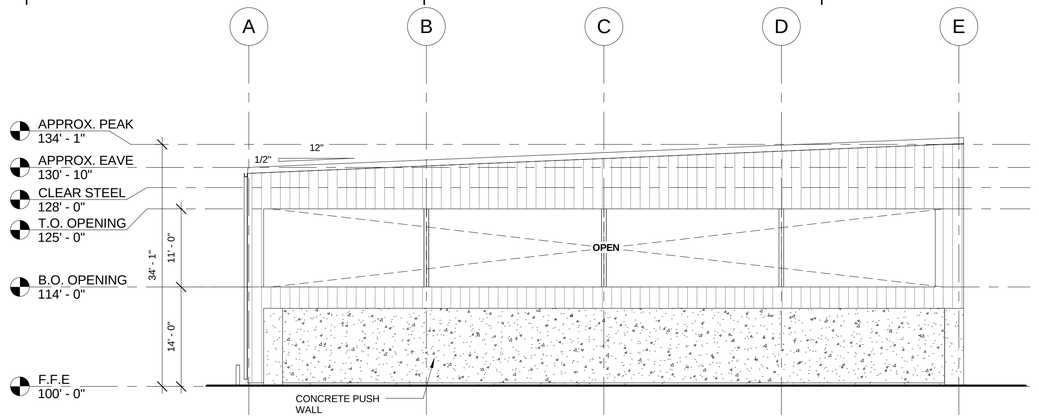

2 A200 WEST BUILDING ELEVATION
3/32" = 1'-0"

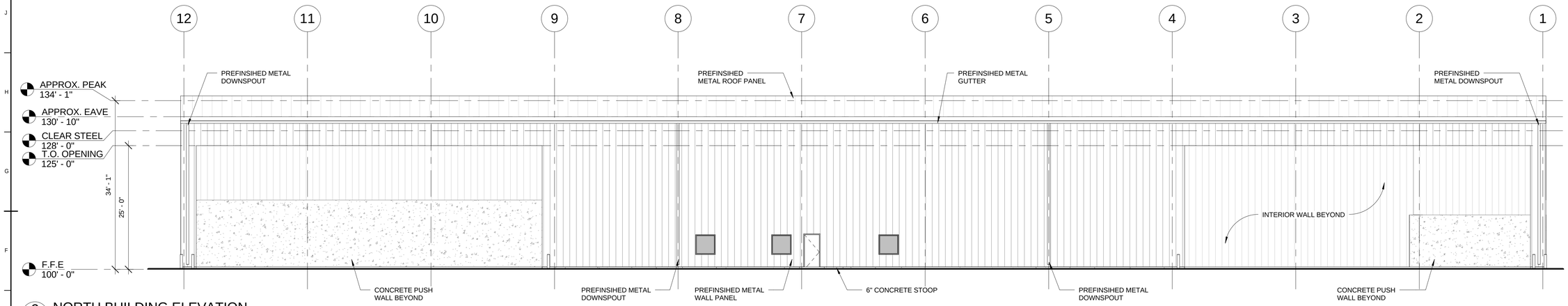

3 A200 NORTH BUILDING ELEVATION
3/32" = 1'-0"

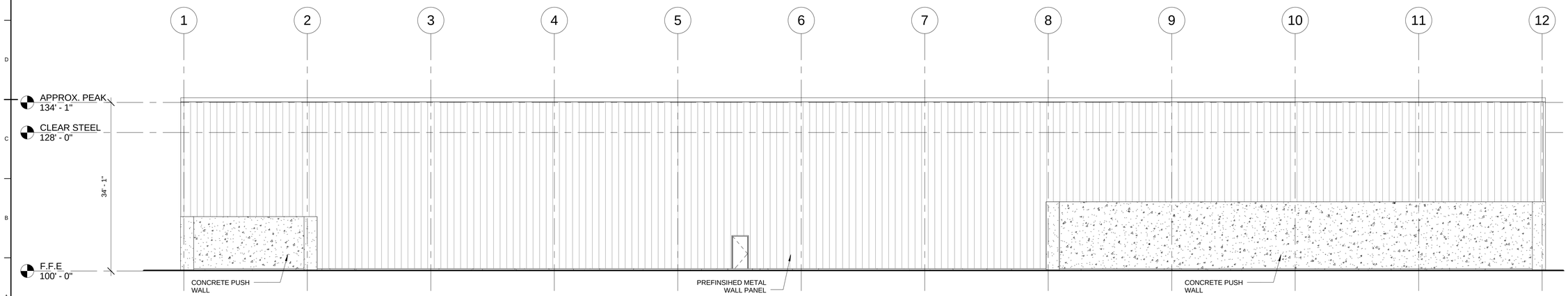

4 A200 SOUTH BUILDING ELEVATION
3/32" = 1'-0"

C:\Users\jmankovski\Documents\REDWING_ASH_FACILITY_CENTRAL_16_jmankovski.rvt

Short Elliott Hendrickson Inc.
3535 Vadnais Center Drive
St. Paul, MN 55110-5196
651.490.2000 main | 888.908.8166 fax
800.325.2055 toll free | www.sehinc.com

PRELIMINARY
NOT FOR
CONSTRUCTION

MARK	DATE	DESCRIPTION

LAB USA'S
ASH
PROCESSING
BUILDING
RED WING, MN

SEH FILE NO.	LABUS 133967
ISSUE DATE	05.27.2016
DESIGN BY	JM
DRAWN BY	KX
PROJECT MGR	BR

SHEET CONTENTS
EXTERIOR ELEVATIONS

A200